Building Inspection Division
THESE PLANS HAVE BEEN REVIEWED FOR COMPLIANCE WITH THE CURRENT EDITION OF THE FLORIDA BUILDING CODE
Lakeland
Date: 11/15/19
Permit Number: BLD19-06035

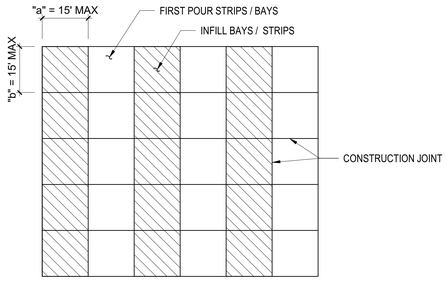

LONG STRIP CONSTRUCTION SCHEMATIC LAYOUT AND CONCRETE PLACING SEQUENCE

JOINT SPACING NOTES

1. PROVIDE CONTROL AND/OR CONSTRUCTION JOINTS AT EVERY COLUMN LINE AND IN BETWEEN THE COLUMN LINES SUCH THAT THE JOINT SPACING DOES NOT EXCEED 15 FEET, UNLESS OTHERWISE SHOWN ON THE DRAWING.
2. MAINTAIN AN ASPECT RATIO: 0.80 < a/b < 1.25
3. CONTRACTOR TO SUBMIT CONSTRUCTION AND CONTROL JOINT LAYOUT FOR APPROVAL.

SLAB PLACEMENT SEQUENCE DETAIL

D1 DETAIL

S6-1-06 SCALE:NOT TO SCALE

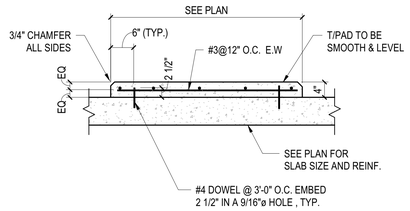

D4 TYPICAL HOUSEKEEPING PAD

S6-1-06 SCALE:NOT TO SCALE

CONCRETE WALL SCHEDULE					
MARK	REINFORCEMENT		COMP. STRENGTH PSI	WALL THICKNESS	REMARKS
	VERTICAL	HORIZONTAL			
CW-1	#5 @ 12" O.C.	#5 @ 12" O.C.	4000 psi	12 in	

D2 CONCRETE WALL SCHEDULE

S6-1-06 SCALE: 1" = 1'-0"

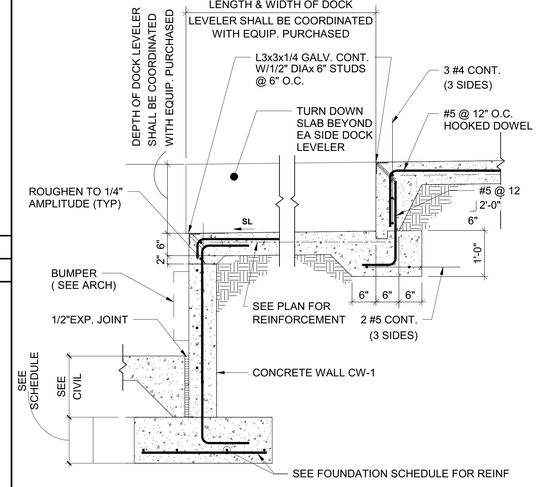

D3 TRUCK DOCK SECTION1

S6-1-06 SCALE:NOT TO SCALE

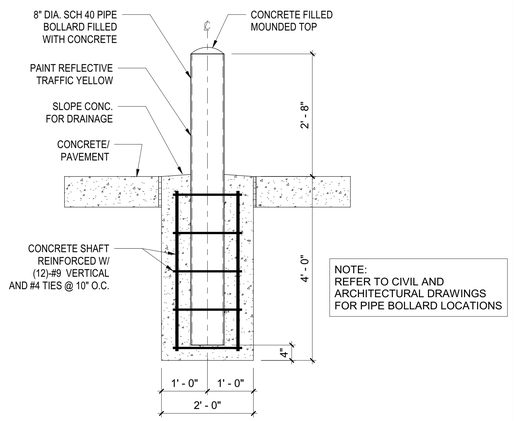

NOTE:
REFER TO CIVIL AND ARCHITECTURAL DRAWINGS FOR PIPE BOLLARD LOCATIONS

B1 TYPICAL BOLLARD DETAIL

S6-1-06 SCALE:NOT TO SCALE

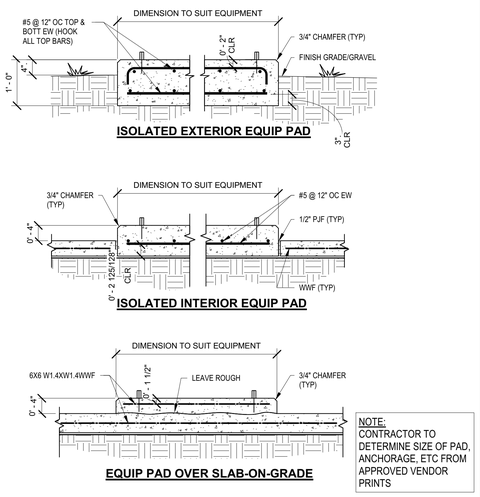

NOTE:
CONTRACTOR TO DETERMINE SIZE OF PAD, ANCHORAGE, ETC FROM APPROVED VENDOR PRINTS

B2 TYPICAL EQUIPMENT PAD DETAILS

S6-1-06 SCALE:NOT TO SCALE

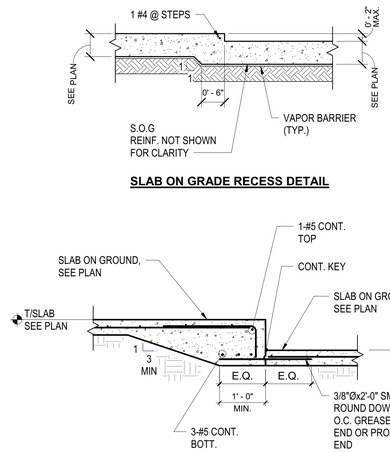

SLAB ON GRADE RECESS DETAIL

SHALLOW SLAB STEP DETAIL

B3 SLAB ON GRADE DETAILS

S6-1-06 SCALE:NOT TO SCALE

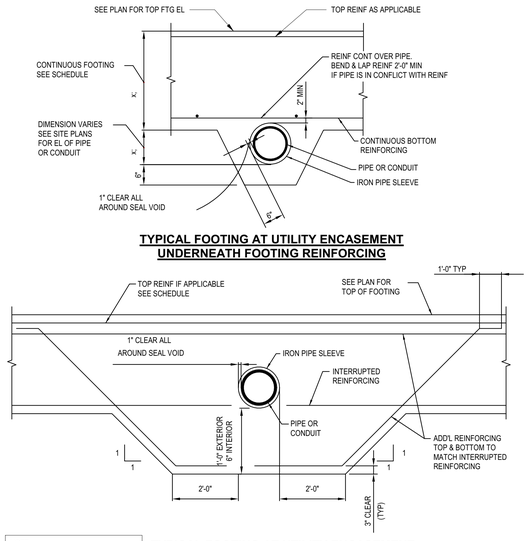

NOTE:
NO PIPES SHALL PASS THRU OR UNDER COLUMN SPREAD FOOTINGS. ALL PIPES SHALL BE INSTALLED PRIOR TO CONSTRUCTION OF FOOTING.

TYPICAL FOOTING AT UTILITY ENCASEMENT INTERFERING WITH REINFORCING

D5 DETAIL

S6-1-06 SCALE:NOT TO SCALE

NOTE: MAX SPACING OF EXP JOINTS SHALL BE 15'-0" (UON)

NOTE: LOCATE ALL REINF. IN UPPER THIRD OF SLAB AND SUPPORT W/ APPROVED MATERIALS NOT EXCEEDING 3'-0" OC

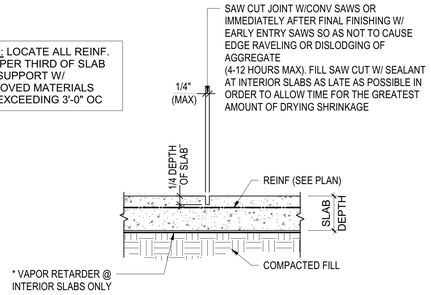

TYP CONTROL JOINT (CJ)

D6 DETAIL

S6-1-06 SCALE:NOT TO SCALE

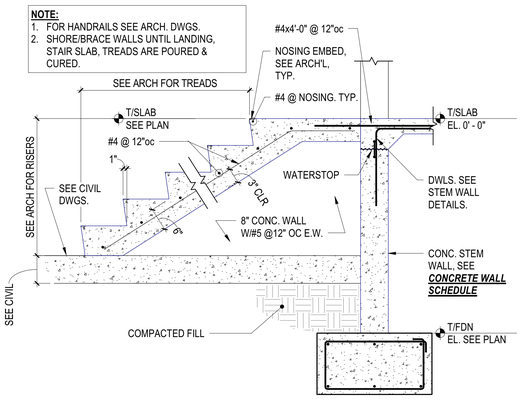

A1 CONC. STAIR @ STEM WALL

S6-1-06 SCALE:NOT TO SCALE

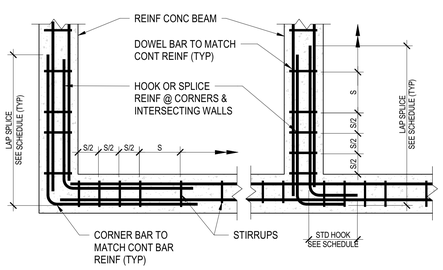

CORNER **INTERSECTION**

CONTINUITY OF CONCRETE BEAM REINF @ CORNERS & INTERSECTIONS

A2 DETAIL (PLAN VIEW)

S6-1-06 SCALE:NOT TO SCALE

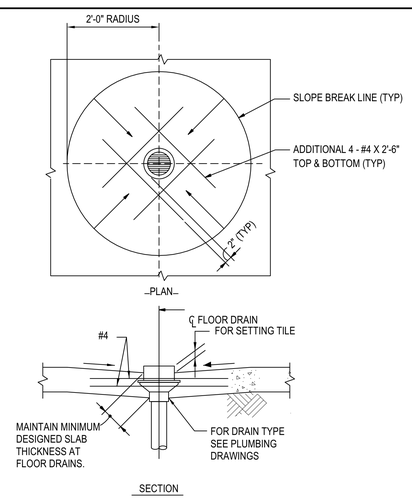

LOCALIZED SLOPED SLAB AT F.D. (CHEMICAL RESISTANT FLOORS OR TILED)

A3 TYPICAL FLOOR DRAIN DETAILS

S6-1-06 SCALE:NOT TO SCALE

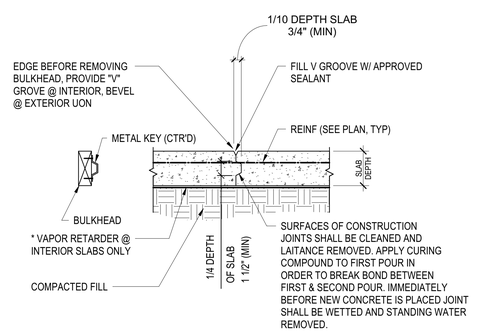

TYP CONSTRUCTION JOINT (CJ)

A4 DETAIL

S6-1-06 SCALE:NOT TO SCALE

This drawing has been prepared for the use of AECOM's client and may not be used, reproduced or relied upon by third parties, except as agreed by AECOM and its client, as required by law or for use by governmental reviewing agencies. AECOM accepts no responsibility, and denies any liability whatsoever to any party that modifies this drawing without AECOM's express written consent. Do not scale this document. All measurements must be obtained from the stated dimensions.

AECOM
BATSON-COOK CONSTRUCTION

PROJECT

PUBLIX HEADQUARTERS BUILDING ADDITION AND PARKING LOT EXPANSION

3300 PUBLIX CORPORATE PARKWAY
LAKELAND, FL 33811

CLIENT

Publix

3300 PUBLIX CORPORATE PARKWAY
LAKELAND, FL 33811

www.publix.com

CONSULTANT

AECOM

AECOM TECHNICAL SERVICES, INC.
800 Douglas Entrance
North Tower, 2nd Floor
Coral Gables, FL 33134
305.444.4691 tel 305.447.3580 fax
www.aecom.com

ARCHITECTURE
LICENSE NO. AA26000687

ENGINEERING
CA LIC. NO. 8115

http://www.aecom.com

REGISTRATION

VINCENT RAJ VACCARELLO-WADEHRA, PROFESSIONAL ENGINEER, STATE OF FLORIDA, LICENSE NO. 81224

THIS ITEM HAS BEEN DIGITALLY SIGNED AND SEALED BY VINCENT RAJ VACCARELLO-WADEHRA, PROFESSIONAL ENGINEER, STATE OF FLORIDA, LICENSE NO. 81224 ON THE DATE INDICATED HERE. PRINTED COPIES OF THIS DOCUMENT ARE NOT CONSIDERED SIGNED AND SEALED AND THE SIGNATURE MUST BE VERIFIED ON ANY ELECTRONIC COPIES.

Vincent R Vaccarello -Wadehra
Digitally signed by Vincent R Vaccarello-Wadehra
Date: 2019.08.22 18:04:03 -04'00'

NOTICE: THE OFFICIAL RECORD OF THIS SHEET IS THE ELECTRONIC FILE SIGNED AND SEALED UNDER RULE 61G15-23.004, F.A.C.

ISSUE/REVISION

I/R	DATE	DESCRIPTION
0	AUGUST 23, 2019	CONSTRUCTION DOCUMENTS
	AUGUST 16, 2019	90% CONSTRUCTION DOCUMENTS
	JUNE 27, 2019	STEEL DESIGN PACKAGE

PROJECT NUMBER

60601397

SHEET TITLE

CONCRETE DETAILS

SHEET NUMBER

S6-1-06

©2016 AECOM Corporation

Designer: Designer Checked: Checker Approved: Approver/ARCH E1 30"x42"
Project Management Initials:
Last Plotted: 8/22/2019 5:41:14 PM
Filename: BMI 360-60601397-Publix HQ\60601397_Publix HQ_STRUCT_8\2019.rvt
Printed on ___% Post-Consumer Recycled Content Paper